RTTY

W7VKO, PHOENIX, ARIZONA

RYRYRYRYRYRYRYRYRYRYRYRYRYRYRYRYRYRYRYRYRYRYRYRYRY

NEWS OF AMATEUR RTTY

MARCH 1965
30 Cents
Vol. 13, No. 3

HORSE TRADES

This page of the Bulletin is for use of amateurs who have RTTY EQUIPMENT FOR SALE OR TRADE and those looking for equipment to buy or trade. It is a free service and may be the means of getting someone on the air.

FOR SALE: Model 15 TTY sync motor, table and power supply, mint condition, $80.00. Model 14 TD, $40.00. Rack Mount, W2JAV converted with scope, $80.00. 40 rolls 11/16" tape, $8.00. Swan 240 with mobile supply, $285.00. Will deliver within 100 miles. K8USD, 281 Crocker Street, Amherst, Ohio.

WANTED: October 1960 RTTY, W6RCM, 2303 Fairgreen Street, Monrovia, Calif.

FOR SALE: Model 26 complete, rebuilt by Tel. Co. and not used since. Excellent condition. W6AFX, 49 West Sycamore Avenue, Arcadia, California.

FOR SALE: Holding magnet selector mechanism with cam. Excellent condition, $10.00. Postpaid, insured. 88 mhy toroids, $1.75 postpaid. Aluminum frame parts, carriage parts, model 15, inquire. W9FTE, 5665 North 38th Street, Milwaukee 9, Wisc.

FOR SALE OR SWAP: 3 new 4CX300A & 2-2C39A or as part payment of a good quality SSB-AM-FSK-CW xmtr in the 100 W output range. W6IOW, 1246 Manhattan Beach Blvd., Manhattan Beach, Calif.

FOR SALE: Model 26 and table, with W6AEE TU, carton of yellow paper, $80.00. W6SQM, 465 North Concourse Avenue, Montebello, California. PA. 1-7022.

WANTED: Collins vernier knob for 75A4 in good condition and reasonably priced. Also would like to trade 800 cycle 75A4 filter for 1.0 kc filter. W1ELU, 175 Millham Street, Marlboro, Mass.

WANTED: RTTY Bulletins, back issues. Send list, price to WA6NAT, 9802 Forni Road, Placerville, California 95667.

WANTED: TT-63/A regenerative repeater and instruction manual. Pay cash or trade RTTY or Ham equipment. K5RTI, 1301 Clearfield Drive, Austin, Texas, 78758.

FOR SALE: Aluminum 20/60 ma model 15 and 14 typing reperf. Trans-dist. All machines like new. New model 28 KSR table model cabinet, $35.00. Local pickup only on these items. K6PZT, 9337 Gotham, Downey, Calif. TOpaz 9-3292.

RTTY, INC.
372 Warren Way
Arcadia, California 91007
Return Postage Guaranteed

U.S. POSTAGE
PASADENA
MAR -3'65
CALIF.
05
P.B. METER 497313

B.A.R.T.G. SPRING RTTY CONTEST

1. WHEN.
   02.00 G.M.T. 20th March, 1965, to 02.00 G.M.T. 22nd March, 1965.
2. BANDS.
   3.5; 7.0; 14.0; 21.0 and 28.0 m/cs. Amateur Bands.
3. STATIONS.
   Stations may not be contacted more than once on any one Band. Additional contacts may be made with the same station if a different Band is used.
4. COUNTRY STATUS.
   A.R.R.L. Country list – except that KL7; KH6 and VO to be considered as separate Countries.
5. MESSAGES.
   Messages exchanged will consist of:–
   (A) Message number.
   (B) Report (R.S.T.)
   (C) Time in G.M.T.
   (D) Country.
6. POINTS.
   (A) All two-way RTTY contacts with stations in one's own Country, will earn two points.
   (B) All two-way RTTY contacts with stations outside one's own Country, will earn ten points.
   (C) All stations will receive a bonus of 200 points per Country, including their own.
7. SCORING.
   (A) Two-way exchange points, times total Countries worked.
   (B) Total Country points, times number of Continents worked.
   (C) Add item (A) and (B) together. This is your total test score.

i.e. SAMPLE SCORE.
(A) Exchange points (302) times Countries (10) = 3,020
(B) Country points (2,000) times Continents (3) = 6,000
(c) Add item (A) and (B) above = 9,020
(total test score)

8. LOGS AND SCORE SHEETS.
   Logs and Score Sheets should be received by:–
   B.A.R.T.G. Contest Manager,
   Alan Walmsley, G2HIO,
   The Woodlands,
   Bath Lane,
   Moira,
   Nr. Bruton-on-Trent,
   Staffordshire,
   ENGLAND.
   Not later than 1st May, 1965, to qualify.

Thanks are due to RTTY, Inc., and VK3KF, for their help in the formation of the rules.

The Committee of the B.A.R.T.G. are hopeful that the inception of a Spring DX contest will further the cause of RTTY and would be grateful if you would help in this matter by giving maximum publicity to the date of the event and to the publication of the rules.

73's
Alan Walmsley G2HIO

EDITOR'S NOTE: RTTY, INC., is dropping its plans for the Anniversary RTTY SS, which was to be held February 20 and 21, in order that a better turn out will be had for the first B.A.R.T.G. RTTY SS Contest. Our best wishes to them, and W6EV will be in there trying to run up a good score.

EQUIPMENT USED AT OZ8US, IB USSING, TORSVANG 101, LYNGBY, DENMARK

THE FGC-39 MULTIPLE TRANSMITTER DISTRIBUTOR (MT-137A/FGC-39)

CECIL C. ARMSTRONG, W7VKO
3109 East Roma, Phoenix, Arizona 85016

Recently this item has been made available thru commercial channels for something in the neighborhood of $35.00 plus freight. The following article is written in hope that it might help others to short cut all of the headaches of wondering what you have without a wiring diagram. Also what to do with all of the massive looking wiring harness and connector that would fit nothing in the average ham shack. However, the connector could be used for, say, a door stop, boat anchor, or whatever your imagination might come up with.

First, A Little Background!

The FGC-39 is one of several models used in tape relay centers. Other multiple units found are basically the same. Some of these are the FGC-38, ANTGC-1, package unit some times referred to as the "coke machine" and the ANTGC-4 which used the multiple transmitters of six in a bank driven by one motor. The most noticeable difference about these units is the difference in the speed. The AN/FGC-39 unit sends a 7-unit code, at 390 OPM which gives 65 WPM. It should be noted here that 65 WPM speed of the unit is created by the stop pulse being shortened to 22 MS, the same as the code pulse. However, it should also be noted at this point taht even with the increased speed the units are still compatible to the 60 WPM equipment. The gears and transmitting cam sleeve number for the 7.42 to 368.1 OPM, 60 WPM will be given later on in this article. The unit, when received, comprised of three separate transmitters with an A.C. synchronous motor giving all common drive. The unit, as used, was attached to separate lines for message transmission on each transmitter. The transmitter distributor units use sending contacts that are similar to the keyboard contacts within the model 14 and 15 teletype keyboard instead of the segment ring such as found on the model 14 TD. On the FGC-39 unit each contact has an adjustment screw to facilitate adjustment of the contact to its proper clearance. (The manual calls for 4½ to 5½ OZ to open contacts and .020-.025 transmitting contact gap.)

The release bar (push down type of switch) was used to control relay equipment, such as activating automatic numbering equipment, etc. After modification, this switch is no longer used as such. The primary use of the lever is the re-engagement of the end of tape mechanism.

Each transmitter distributor has its own control magnets, much like the ones in the model 14 and 15. Unfortunately they also use 115 VDC, but with a little half wave D.C. supply you're in business. (Later explained in text.)

It is not within the scope of this article to cover all of the differences between the unit code, speed, bauds or theory involved. For all intent and purposes, let's just say that the stop pulse on the FGC-39 is slightly shorter, thus giving the increased speed.

Tape Heads!

First remove the top cover. Then the tape heads can be removed one at a time by removing the front screws entirely and just loosening the single rear one. When reinstalling the transmitter distributors, after modification be sure that you don't press the entire assembly too far into the mating fiber gear or considerable gear hum will result.

The single pole switch is mounted on top of the transmitter distributor tape head plate, between the tape lid and model number name plate. (See picture.) If you happen to have available three extra "on" name plates these can be mounted just ahead of the switch. Care must be taken when drilling both the switch hole and the name plate hole so that no filings get into the mechanism. This could lead to some real trouble. After mounting the switches, remove the purple and red wires from the release bar switch (push down lever on the very front). They may be other colors but it will be the two wires on the outside contacts of the switch. Secure these two wires on the on/off switch previously installed. Bend the release bar latching bar down sufficiently so that the release bar will not latch into place, as there is no need for it to latch. You use it only to re-engage the end of tape lever. And the tape head operates erratically if the release bar is pushed down too far. This completes the modification to the transmitter distributor.

Wiring, Local Loop and Magnets!

Reference is made to figure 1A. It will be noted that in the original state you have a separate wire for each connection on each

slip connection. Nearly all of this wiring is removed from the original harness and subsequent connection within the unit. As the diagram shows, each unit is wired in series with each other with leads coming out for only one local loop (two wires) and the A.C. source.

If any other requirements are needed, such changes would have to be considered by the individual requirement. The colors, herein quoted, may not be the same as yours, so all numbering systems will be from the left to right, looking from the top front, down.

Slip Connection Wiring!

Starting from left to right, hook a wire, long enough to go outside the unit for one side of the local loop to pin 1 of the first unit. Hook a wire from pin 2 of number one unit to pin 1 of number two unit. Another wire from pin 2 of second unit to pin 1 of the third unit. Then hook a long wire from pin 2 of the third unit to other side of the local loop. Place a jumper wire from pin 3 to pin 4 on each unit. Run a wire from pin 5 of number one unit to pin 5 of number two unit. Continue this same wire to pin 5 of third unit. From pin 5 of the third unit run a wire long enough to go under the chassis to be hooked to the 115 VDC 50-60 mill source under the chassis (see figure 1B). Place a jumper wire from pin 6 to pin 8 on each unit. Then run a wire from pin 10 on the first unit to pin 10 on the second unit, continue this on to pin 10 of the third unit. From pin 10 of the third unit run a long enough wire to go under the chassis to be hooked to the 115 VDC 50-60 mill source under the chassis (see figure 1B). This completes the wiring of the slip connection terminals. Note that pins 7 and 9 are both blank.

Conclusions!

Reference is made to figure 1B, showing wiring for the A.C. D.C. supplies located underneath the chassis. The resistor used in the internal 115 VDC 50-60 mill magnet loop is the one that came with the unit. Actually there are three of them, but you need only use the amount that will give you the 50-60 mill load. A milliampere meter in series will show the amount of current drawn. The manual states that only 25 mills are required to run the magnets; however, it was found that if you are going to run all three of the magnets, a 50 to 60 mill load was required. Later in the manual, for actual use the manual admits that even up to 100 mills helps in some cases.

The FGC-39 unit comes with the following gears in use: 117323 steel motor pinion, 117324 mating motor fiber gear, 97563 metal drive gear on transmitter, 97576 mating fiber drive gear and 129349 transmitting cam sleeve (this is the part that sets the code unit). In order to put the FGC-39 on 7.42 unit code, 368.1 OPM 60 WPM, the three transmitting cam sleeves within the transmitters and the motor pinion and mating fiber gears must be changed. The following gears must be used: 112691 steel motor pinion, 112690 mating motor fiber gear and 129296 transmitting cam sleeves (3 req.) (7.42). It will be noted that the 97563 and 97576 gears, of which there are one each on each transmitter, do not change, as these gears are the same whether the unit is on 60-65, 75 or 100 WPM. It was found that the cost of the cam sleeves and gears was much more than the amateur cost of the unit. It is therefore recommended that the original speed be maintained. It is a legal speed and actually it would be a great boon to those who do a great deal of message handling, as the increased speed will move the traffic faster.

In the case of units other than the FGC-39, some will have governed motors (FGC-38X) and will transmit the 7.42 unit code and 60 WPM; however, some of these same units may only have two message-sending transmitters and one numbering (figure only) transmitter. The numbering transmitter has a letters sensing mechanism, that on sensing letters combination the control contact opens. By removing this mechanism, it will work the same as any message transmitter.

It should also be noted that by using the suggested wiring system that any one or all of the transmitter distributors can be used. Therefore, if you would have a problem with one distributor you wouldn't be down. Just remove and repair at convenience, as others will perform.

All in all the unit is performing very well and should do so for many, many years for even the most active amateur with heavy traffic handling or what have you.

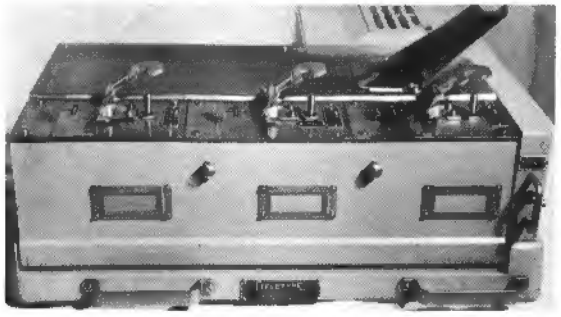

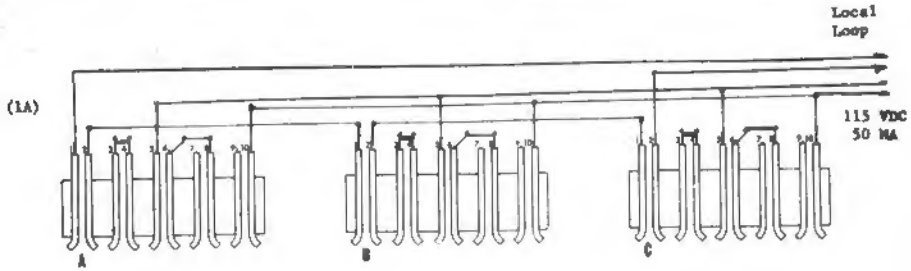

Distributor-Transmitter Base

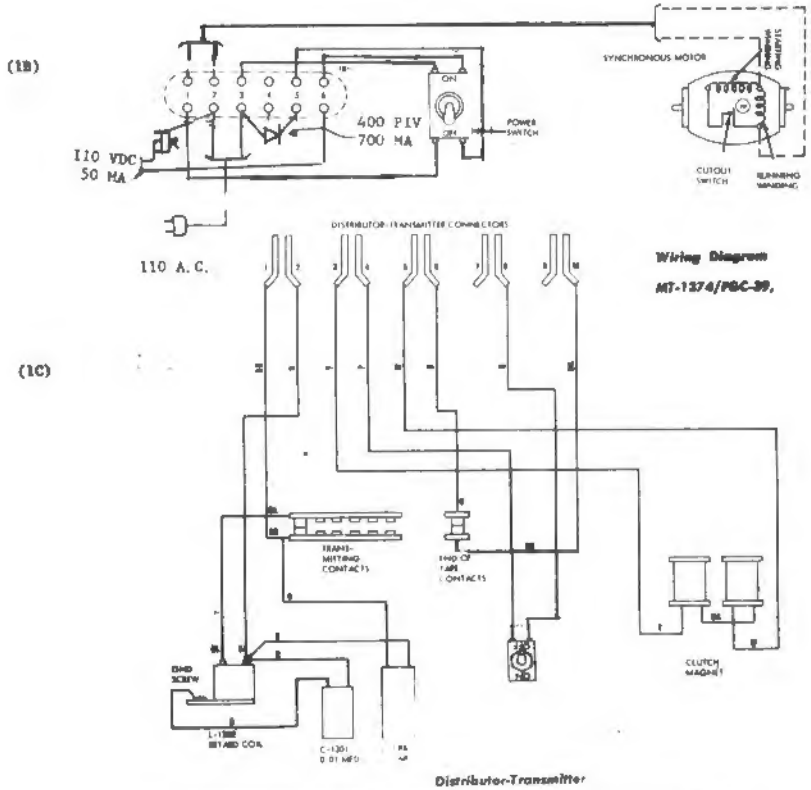

Wiring Diagram MT-1374/FGC-39.

Distributor-Transmitter

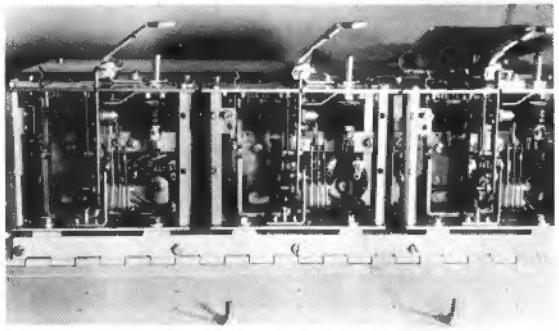

THE SUPER TWIN CITY TERMINAL UNIT

(Modifying the Twin City TU for use on the HF Bands)

JERRY HALL, K1PLP, ex-KH6EGL
Hopkins Street, Wilmington, Mass. 01887

This article describes a simple modification for the Twin City TU which provides better performance on the High Frequency bands. The article also presents an input bandpass filter design for the 1275-2125 cycle range, as opposed to the standard 2125-2975 cycles. This filter may, of course, be used with other design Terminal Units than the one described.

RTTY newcomers very often start out with the type of TU designed for audio frequency shift keying, such as the Twin City, or the W2PAT units. These units offer simplicity and therefore a quick means of printing received signals. But if the RTTY newcomer spends much time on the HF bands, the inadequacy of these units under the effects of selective fading and strong adjacent-frequency QRM soon becomes evident. For more enjoyable HF contacts, most newcomers decide sooner or later that *something* must be done to improve printing results. The choices are few—either build (or buy) a more elaborate TU, or modify the original one. For many reasons, the modification choice may be the more desirable one to some amateurs (a lack of time to build a complete new TU, insufficient RTTY activity to warrant the effort and cost, etc.) But unfortunately, modification information to date has not been readily available. It is the intent of this article to offer some information on the subject.

Those amateurs possessing a W2PAT unit can modify it to become a W2JAV unit by adding two tubes and associated parts, and making minor circuit changes. To those amateurs possessing a Twin City unit, read on.

Simplicity

The reason many amateurs choose the Twin City TU for their first unit is due to its simplicity—three tubes, 14 resistors and 11 capacitors, plus channel filter components, a few diodes, a couple of transformers, and a polar relay. This is about the minimum as far as parts required to do the job. This simplicity theme was retained when the Super Twin City circuit was evolved, yet the unit does a remarkable job on the HF bands.

With the addition to the original Twin City circuit of a dual triode tube, six diodes, seven resistors and three capacitors (total cost less than $5 if all parts are purchased new), garble due to selective fade is virtually eliminated. With the further addition of a bandpass input filter and a triode amplifier section, the unit will perform along with any of them. The discriminator driver triode can be replaced with a dual triode tube, and the second section can then be used for bandpass amplification. The total unit configuration would then include only four dual triode tubes.

Extensive tests using audio tape recordings at both tape and manual keyboard speeds were conducted by the author during the evolution of these modifications. 10 or 12% copy due to selective fade and/or near-frequency QRM was brought up to about 98% copy, and original 50 or 60% copy became essentially errorless after modification. Improved copy under QRN conditions also resulted with the addition of the bandpass filter. However, the Super Twin City unit will *not* copy signals in the noise, nor will it give errorless copy when a strong CW or RTTY station is parked right in the input filter passband. But for the small cash outlay and the few hours work involved, the results should be quite gratifying.

Selective Fade Compensation

Previous articles have pointed out the disadvantage of the Twin City and similar circuits under selective fading conditions. Both mark and space tones must alternately be present at all times for correct copy. If *either* half of the signal fades very far below the limiting level, garble results due to temporary loss of one tone. This disadvantage can be turned to advantage if the unit is modified to automatically operate on either a mark only or on a space only tone. With 850 cycle shift, most fading *is* selective (rather than flat fading), and the advantage of frequency diversity can then be realized. When one half of the signal fades, copy can continue on the other half. Such operation can be had by incorporating a pulse inverter tube at the discriminator output, and cross-feeding inverted inpulses from one channel to the other. Mark pulses, when inverted, become space pulses and are cross-fed into the space channel, and vice versa. With the gain of the inverter stage near unity, the same amplitude pulses are fed to the opposite channel as are delivered by the discriminator to the normal channel. The net result is that either tone now generates both mark and space impulses.

Thus, copy can truly be obtained automatically on mark only or on space only tones. An on-off keyed mark or keyed space signal can be copied with this circuit addition. Copy can therefore be maintained during periods of selective fade, even if one tone has faded completely into the noise. With both tones present, "double assurance" of a correct mark or space decision is provided. Isolation between the discriminator and the inverter tube outputs is obtained by using digital "OR" gate techniques.

The ability to make copy on mark only or space only is also useful in dodging QRM on either frequency, in that the channel with the interference can be switched out manually with appropriate switching circuitry. So long as the desired signal is equal or stronger, copy can be maintained even if the interfering signal is dead-center in one of the frequency channels. Another advantage is that more tolerance of non-standard shifts is provided so that "straddle-tuning" of the signal is not so critical.

Addition of the Pulse Inverter

Figure 1 shows a portion of the original Twin City circuit. The Xs indicate where the discriminator output feeds the relay driver tube. The circuit is broken at these points and the circuitry of Figure 2 is inserted. Note that the 470K ohm grid resistors of the relay driver stage remain at the grids when the circuit is broken.

The broken connections are restored with coupling diodes CR1 and CR4. The inverter circuitry itself requires little explanation—1 megohm resistors are used for isolation and coupling to the grids of the inverter tube from the discriminator outputs. 12K ohm unbypassed cathode resistors are used, and 27K ohm resistors are used for plate loads of each section of the inverter. A 0.1 microfarad capacitor and a diode are used in series for coupling the inverted pulses from the plate of each inverter section to the grid of the 6SN7 or 12AU7 relay driver tube. The 50 millisecond R-C time constant of the coupling capacitor charge path in this portion of the circuit seemed to provide best overall results for both manual keyboard and tape speeds, with a range of 5 to 250 milliseconds tried. CR3 and CR6 are used to bypass negative-going signals at the inverter outputs directly to ground. In wiring up the inverter stage, be sure to "criss-cross" the connections from the plates of the inverter tube for the two channels.

S3, if desired, is used for manually dropping either the mark or the space channel. This is a refinement not necessary to the modification, but does provide a convenient feature. A SPDT switch for each channel could be used instead of the 2P3T unit shown. In dropping a channel, that discriminator channel output is opened and the junction of the 1 megohm resistor and the coupling diode is grounded. Grounding the discriminator output directly to drop a channel is not recommended—it places a heavy load on the audio stage driving the discriminator, and operation in the desired channel suffers.

The original power supply can be used to power the inverter tube, but a decoupling network is required between the plates of the inverter stage and the supply due to light filtering. Sixty cycle spikes coupled to the relay keyer tube grids can cause erratic operation if the decoupling network is omitted. The network can consist of a 3900 or 4700 ohm ½ watt resistor between the junction of the two 27K ohm plate load resistors and the B+ supply. The junction of the three resistors is bypassed to ground with a 2 to 10 microfarad 450V electrolytic capacitor. This value is not critical so long as it is somewhere in this range.

The two sections of the tube used as the inverter stage should be DC balanced. This may be checked with no signal input to the TU and with the channel switching set for normal operation, by measuring the voltage drops across the two 12K cathode resistors. The voltages should be approximately equal, indicating the two sections are statically balanced.

Input Bandpass Filter

The author operates his TU with input audio frequencies of 1275 and 2125 cycles, for two reasons. First, the receiver BFO will not offset by more than about 2 kc either side of zero beat. Second, using 100 millihenry toroids in the channel filters, the mark-to-space channel isolation has been measured as about 6 db better with these frequencies than with the standard 2125-2975 cycle input. This is probably due to the greater frequency ratio or the lower range.

No specific information on input bandpass filters in the lower frequency range has been found by the writer. Therefore, several types of input filters, including a comb filter, were constructed and tested using audio recordings. Best overall results in the 1275-2125 cycle range were achieved with the sharp selectivity of a constant-K TT section filter. The advantage of this type of filter is that it may be used for any shift, and may therefore be left in the circuit permanently.

The insertion loss of all filters tried was several db, so it is necessary to add an audio amplifier stage, unless one doesn't mind running the receiver audio nearly wide open. Figure 3 shows the circuitry of the bandpass filter and the amplifier stage.

Table 1 gives the calculated values for the bandpass filter components, utilizing commonly available toroids for L2. A 20% departure from these values is tolerable, but the resonant frequency of each filter section, L1-C1 and L2-C2 should be as near as possible to the F_0 frequency given. 100 millihenry toroids are recommended for L2 in the 1275-2125 cycle frequency range, to utilize the slightly higher Q and higher filter impedance. The author has found that surplus units sold as 100 millihenry toroids generally run 10 to 20% higher effective value in the audio range. If a surplus unit is not immediately available for L1, a unit may be purchased new from most electronic wholesale houses. Triad and UTC, among others, manufacture

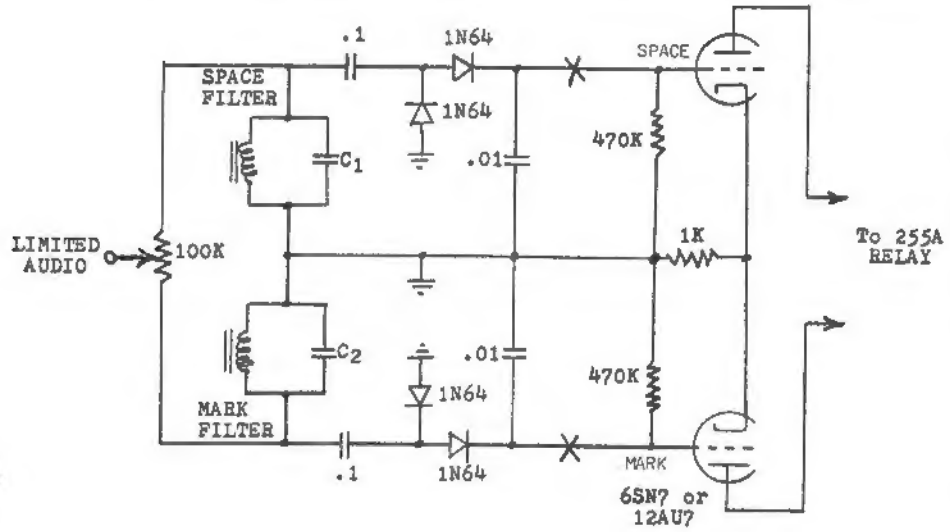

FIGURE 1. PORTION OF ORIGINAL TWIN CITY TU CIRCUIT.

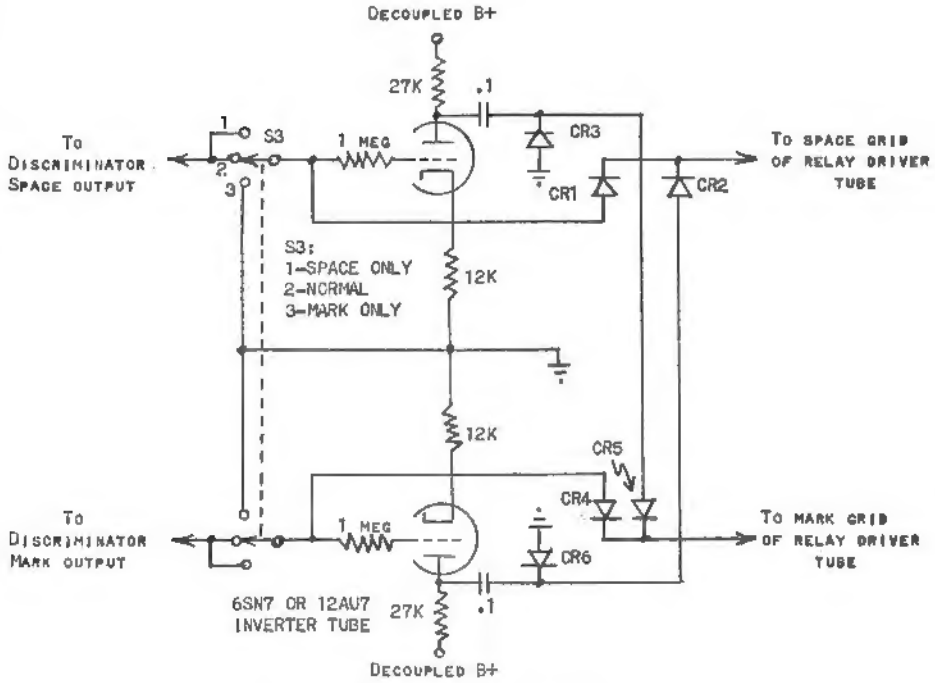

RESISTORS ARE 10%, 1/2 WATT COMPOSITION.
CAPACITORS ARE MICROFARADS, 400V RATING PAPER OR MYLAR
ALL DIODES ARE 1N60, 1N34, OR EQUIVALENT

FIGURE 2. PULSE INVERTER CIRCUITRY.

toroids in values up to several henries which are not much larger than the usual 88 millihenry units. Prices run a few dollars each.

Freq. Range Cycles	L2 mhy.	C2 mfd.	L1 mhy	C1 mfd	R1 ohms	R2 ohms	F_0 cycles
1275-2125	120	.079	800	.012	4700	2200	1640
1275-2125	100	.095	665	.014	3900	1800	1640
1275-2125	88	.110	585	.016	3300	1600	1640
2125-2975	88	.046	1,380	.003	8200	3900	2510

F_0 is the frequency to which each filter section should be resonated, i.e. L1-C1, and each L2-C2 section.

TABLE 1

Filters other than the type presented here probably will give equal results in the 2125-2975 cycle range, without the expense of obtaining an inductor for L1. Several articles on filters in the higher frequency range have appeared from time to time in past issues of the RTTY bulletin, but the information is given here for those who might wish to try this type of filter.

It was found by experimentation that, in this impedance range at least, the input impedance as seen by the filter has an almost negligible effect on the filter response curve. A low impedance driver source, such as a cathode follower, is therefore not absolutely necessary. The main requirement here is that some isolation be provided between the filter input and the driving source, in this case the secondary of T1, which will probably have a secondary impedance of 19K to 22K ohms. R1 provides this isolation. R2 provides the terminating impedance for the filter, and its value will affect the response curve.

Figure 4 shows the measured response of the filter in use by the author. Insertion gain of the filter with amplifier is 6 db at 1275 cycles. Component values are as follows:

L1—1 hy toroid.
L2—115 mhy and 120 mhy (surplus "100 mhy" toroids).
C1—.01 mfd.
C2—.0822 mfd and .08 mfd.

The steps in the skirt selectivity in the 400 and 700 cycle frequency range are due to second and third harmonics of the input signal passing through the filter. The same effect was noted on other filters tested, and is apparently a problem which must be endured in this frequency range. Because there is good skirt selectivity to 24 db down from maximum response, this should cause no real problem. In one of the filters tested, the first step was only 14 db down.

Operational Notes

Adjustment of the audio balance control is unchanged by these modifications—the control should be set so that the DC output from the mark side of the discriminator with a mark signal being limited is equal to the DC output from the space side with a space signal being limited.

Originally the polar relay bias adjustment was to be set for normal operation with zero current at the test jack. Slightly better operation has been realized at K1PLP by using the following technique. With no signal input, vary the adjustment so that the printer runs open. Then back it off just past the point where the machine ceases to run open, and leave it there. This provides a slight marking bias, which seems to help copy on most signals. By this method, if the normal/inverted switch at the output of the TU is switched, the bias adjustment must be reset for that switch position.

When copying a signal on space only, especially with heavy QRM on the mark frequency, it may be necessary to slightly retouch the bias adjustment to provide additional marking bias. This is due to incomplete isolation between the discriminator channels, resulting in some discriminator output on the space channel even though there is no space signal present. This is not so much of a problem when copying on mark only, because space-to-mark channel isolation is usually better. Of course the advantage of polar relay output keying is that the bias can easily be varied to compensate as required, whether it be for receiving conditions, sending bias, or what.

After the modification is completed, it will be noticed that less audio is required to properly drive the unit, aside from the 6 db gain of the amplifier and bandpass filter. Best results will be obtained when the received audio signal is slightly above just being limited. Beyond this setting, the signal-to-noise ratio at the discriminator decreases rapidly as the gain is increased, because the noise increases while the signal is held at a constant level by the limiters.

Occasionally a rapid fade on mark at slow manual keyboard speeds will produce extra letters on the copy. This can be reduced somewhat with the proper audio gain setting, i.e., avoid hard limiting.

One more note—with the inverter tube added to the TU, the machine will now print gibberish during CW identification, or even on narrow shift ID, instead of patiently standing by as it used to. The keying now makes marks and spaces come out of the TU, so a receiver lockout switch probably would be a desirable asset if not already in use at your station.

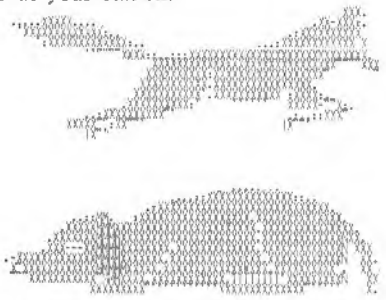

THE QUICK BROWN FOX JUMPED OVER A LAZY DOG'S BACK 1234567890 TIMES

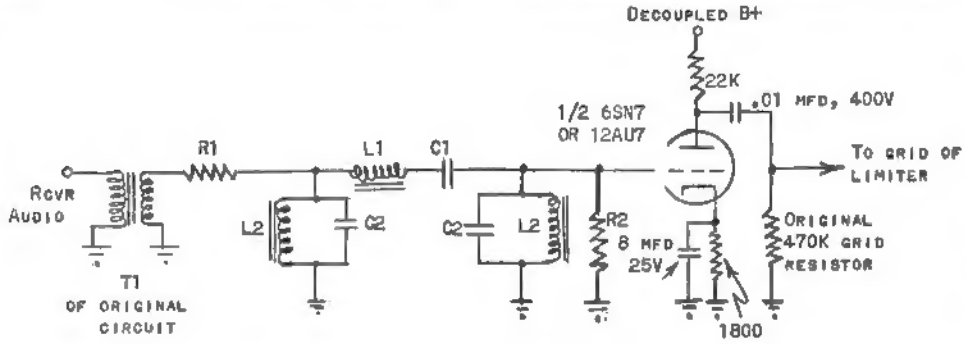

RESISTORS ARE 1/2 WATT COMPOSITION. SEE TABLE 1 FOR COMPONENT VALUES.

FIGURE 3. BANDPASS FILTER AND AMPLIFIER

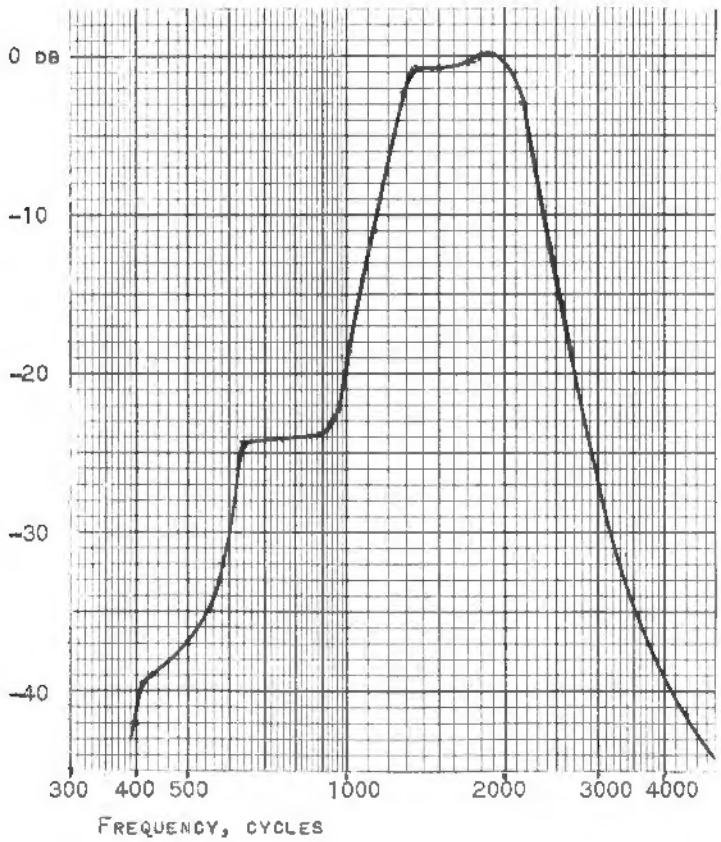

FIGURE 4. BANDPASS FILTER RESPONSE.

A MIXER SYSTEM FOR VARIABLE SHIFT RECEPTION

JOHN L. HEMINGWAY, KØEII
937 11th Avenue, South Clinton, Iowa 52732

This system is the end result of a series of experiments directed toward utilizing a pair of odd frequency but excellent quality surplus filters in a terminal unit front end. It should also have appeal to the man who wants to build up a set of sharp multi section filters, but feels it would be a futile venture in view of the multiplicity of shifts found on the air these days, both ham and commercial.

An audio heterodyning approach was indicated but the usual single ended tube type mixer was not entirely suitable due to the particular frequencies involved and the fact that the filters were 500 ohm input impedance. The frequencies were 2465, and 2975, and it was desired to make the system tunable for all shifts from 0 to 1000 cycles.

Using 2975 for the fixed frequency and mixing the variable tone into 2465, it is apparent that with a conventional mixer, 2465 is wide open to CW or other interference feeding straight thru from the receiver. A notch filter could be used but would notch out part of the desired tuning range. This leaves just one alternative, a balanced mixer, and one using solid state diodes rather than tubes would also solve the low impedance problem.

This is not a new device, having been used in telephone carrier work for a long time and in side band design in more recent years. One configuration in particular has the ability to eliminate both the signal and the injection frequencies from the output. Only the mix products remain. This is the circuit shown in figure 1. The diodes are silicon power type and the series resistors tend to match the forward resistance of the diodes to the transformer impedance. The efficiency and dynamic range of the mixer is dependent on this and with the proper match the conversion loss can be held to about 6 DB. The resistors also tend to eliminate variation in forward resistance of the diodes which determine circuit balance, and should be 5 per cent tolerance or hand picked with an ohmmeter. The transformers should be identical. Surplus hybrid fone patch transformers are ideal, also telephone Co. repeat coils.

Any audio oscillator that will tune the desired range and deliver 5 to 10 volts peak to peak into 500 ohms will work as an injection signal source. A suitable oscillator circuit is shown in the measurements section of the Amateurs Hand Book. The frequency is made continously variable instead of step switched. The R-C oscillator is particularly attractive from the standpoint of dial calibration since frequency is virtually a linear function of a change in R or C. A 100 pf per section 2 gang variable capacitor is used as the tunable element with sufficient fixed padding to bring the frequency into the desired range. The oscillator can also be tuned by ganging a pair of pots and varying the "R". The tuning range used with the filters under discussion is 4440 to 5440 cps. This would, of course, be different for filters other than 2465. Output was taken from the cathode resistor as shown in the handbook and fed to a 6V6 stage with an output transformer to match a 500 ohm line.

PERFORMANCE

With the standard scope hookup for plus pattern presentation and the audio input level set for 4 inch mark and space deflection, sweeping the audio thru the range from mark to space will result in no other spurious responses. A good check for linearity and dynamic range is to set the shift to zero and feed in a space tone which should give a perfect square pattern. Varying the audio level thru the usable range should not change the aspect ratio of the pattern more than a few percent.

COMMENTS

The only spurious response would be to tones in the 7000-8000 cycle range (additive mix) and it is assumed that the associated receiver will have sufficient selectivity to eliminate these from the pass band.

This system has been in daily use for over a year and no shortcomings have shown up during this period. It will copy shifts down to 50 cycles although the thin lines of the scope pattern start to broaden at 100 cps. with the filters used. Due to the fact that there are two variables (receiver and T.U.) involved in tuning a signal, and the scope pattern will not rotate but merely shrinks to a dot when you are off tuned, I have found it expedient to incorporate a set of broad filters (TV width coils set for 850 cycles) that can be switched in for rapid acquisition of signals with unknown shift. The filter frequencies used in this discussion have no special significance, they were what was available at time of construction. Any two filters within reason may be used as long as one falls within the audio passband of the associated receiver. If you have a choice it's to your advantage to make the fixed filter one of the standard tones so

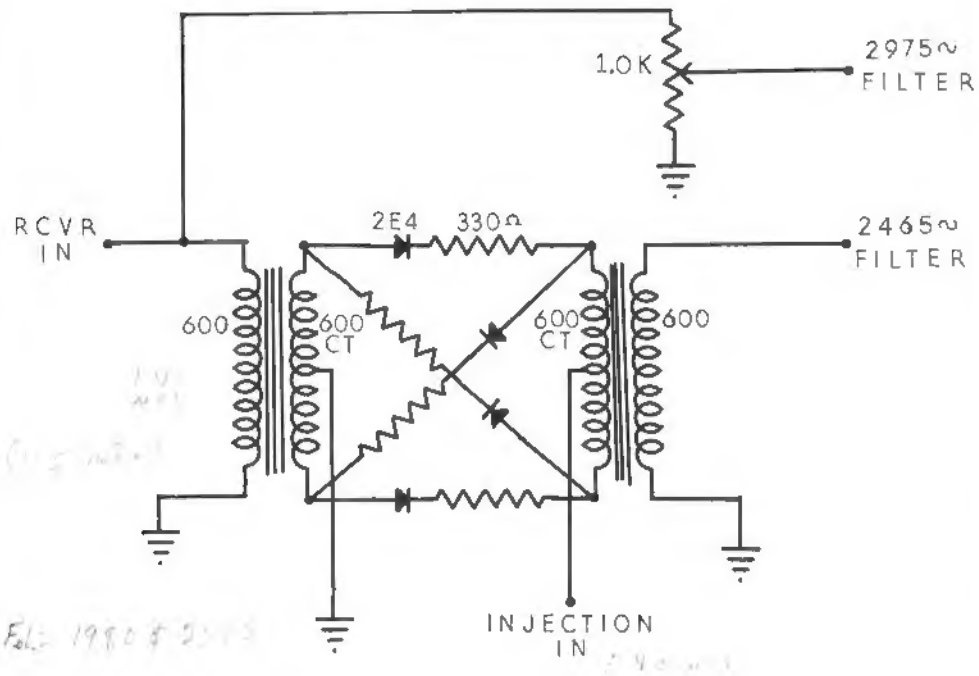

FIG. 1

that the TU may be used for VHF work with AFSK.

An optional circuit modification is a filter inverting switch to put the opposite filter in the fixed position thus making the TU compatible with fixed BFO and restricted passband receivers now in common sideband use. A little calculation will show that the injection range hence dial calibration remain unchanged. The receiver would then be tuned to give tones of 1615 and 2465 in the system just described.

This mixer was designed to work at a low level, since the associated filters were limited to 1. milliwatt input. P to P maximums of 1 volt in, 0.5 volt out, and an injection of 5 or more volts are representative. I see no reason why the system would not work at higher levels as long as the signal to injection tone ratio of 1 to 5 or better is maintained, however, this has not been tried.

REPEATER SATELLITE, OSCAR III

By radio (W6ASH and the Oscar Net to W1AW Jan. 15): "The satellite this weekend will be delivered to the launching agency . . . the launch sked is expected to be in the period mid-February to mid-April. Orbital data will be sent after launch by c.w. 3507-7015-14130 kc.; RTTY 3620-7040-14090 kc.; SSB 14300 kc."

The frequency for signals accepted for relay by the satellite is centered on 144.1 Mc. See page 11, February 1965 QST.

F. E. Handy, W1BDI

RTTYers who have the Collins KWM-2/2A and S-Line Equipment, write to Doug Horner, Service Engineer, Amateur Products, Collins Radio Company, Cedar Rapids, Iowa 52406, for their information sheet 523-0182000-002311 covering RTTY Operation of these units.

NOTES ON CHANNEL FILTERS

JOHN A. BAILEY, W8UJB
615 First National Tower, Akron, Ohio 44308

In the construction of a TU it is highly desirable not only that both discriminators, mark and space, develop equal voltages at their respective frequencies but also that the response curves of each filter be approximately identical.

This is because different voltages developed across the two filters, with uniform input voltage, or, different response curve skirt widths result in the cross-over point being located other than half way between the mark and space frequencies. This produces bias and tends to cause printing errors.

The wide spread use of the ubiquitous 88 MH toroid has resulted in the common practice of using the 88 MH toroids with appropriate capacity tuning for both mark and space channel filters. At this point, an examination of what happens in such case is in order.

The expressions for determining the inductive reactance of the toroids, the Q of the tuned channel filter and the impedance of the channel filter are as follows:

$$X_L = 6.28 \times .088 \times F$$

$$Q = \frac{X_L}{8}$$

$$Z = X_L Q$$

Where:

X_L = inductive reactance of the toroid in OHMS.

F = frequency in cycles per second.

.088 = the inductance of the toroid in Henrys.

8 = the DC resistance of the toroid (both windings in series) in OHMS.

6.28 = 2 Pi.

Z = impedance of resonant filter at the resonant frequency in OHMS.

A few minutes computation discloses that using 88 M toroids in both channel filters results in the following:

Frequency	Q of filter (unloaded)	Z of filter (unloaded)
2975 CPS	205.6	338,212 OHMS
2125 CPS	147.	172,725 OHMS
1275 CPS	88.	62,040 OHMS

It is obvious that the 2975 CPS filter will develop nearly twice the peak voltage developed by the 2125 CPS filter and if the two lower frequencies are being used, that the 2125 CPS filter will develop nearly three times the voltage that the 1275 CPS filter develops. This is an unbalanced condition, indeed!

A simple solution to matching the Q and Z of the channel filters is to reduce the inductance of the toroid in the higher frequency so that both Q and Z of both filters match. Removing 130 turns from one coil of an 88 MH toroid reduces the inductance to 59 MH and when used at 2975 CPS results in a Q of 157 and Z of 173,170 OHMS which closely matches the Z of the 2125 CPS filter and centers the cross-over point. (Note: Removal of the 130 turns reduces the DC resistance of the toroid to 7 OHMS). The toroid then resonates at 2975 CPS with .0485 MFD capacity. Removal of 175 turns from one of the coils of an 88 MH toroid reduces the inductance of the toroid to 50 MH and when used at 2125 CPS results in a Q of 95 and Z of 63,365 OHMS which closely matches the Z of the 1275 filter and centers the cross-over point.

If it is then desired to reduce the sharpness of response of the filters they may be loaded with equal resistances.

"ANOTHER METHOD TO HARDEN AND PRESERVE TAPES"

JOHN D. FOSS, K9QNV
214 Siwiha Drive, Grayslake, Illinois

The print coater liquid squeegee supplied with Polaroid film may be used to harden and preserve chadless paper brag tapes. Simply once over wipe each side of the tape loop with the liquid, leaving a light film which will dry in a few minutes.

By actual test a 14-inch diameter chadless tape loop treated this way was passed through the FRXD TD thirty times continuously with a three-line message without any damage to the tape and not a single error.

The tape loop had no guide ways and was allowed to swing freely as it passed through the TD in this test. I am still using the original test tape at this station and it still shows no sign of wear after at least twice as many round trips through the TD as was made in the test. Be sure to make the tape loop first and then rub the squeegee in the same direction with the partially punched holes.

DX-RTTY

BUD SCHULTZ, W6CG
5226 N. Willmonte Avenue, Temple City, California 91780

Hi DX'ers:

It's time for the monthly chore of sorting through the mail-bag to see what's the latest poop from the group. However, before we start to open the overseas collection I have to take time out to correct a grievous oversight in last month's column. I completely overlooked a salute to Cecil of W7VKO for receiving the #44 WAC-RTTY. Cec sent in a beautiful collection of QSL's to earn his certificate. Sorry I forgot to tip my bonnet to you, Cecil—you surely deserved it. You fellers have been swamping the DX department with your requests for awards but as of this date yours truly is now caught up so you can start in again. Last month I received a notation that I believe originated at G3CQE regarding an award to be given by the BARTG for countries worked. At the moment I cannot locate the details but will try and have some info on this for next column. On this subject I am in receipt of a letter from Doc, G2UK, who also mentions the BARTG DX Certificate but unfortunately the specifics were not mentioned. In his letter G2UK points out that some changes in the BARTG administration were made at the last annual meeting. The new secretary is G3LLV and the BARTG Newsletter is being handled by Arthur, G2FUD. G6CW was elected president for the coming year and Doc, G2UK, is now the treasurer. Doc writes that due to the efforts of G2FUD the availability of RTTY gear in England has greatly improved to the point where there is no longer necessity for the excuse that one cannot get on the TTY mode due to lack of suitable equipment. According to Doc the RSGB and the GPO have agreed on a very satisfactory provision for RTTY that is now being written into all the licenses so that this mode of transmission can be used by any radio amateur in the same way as any other mode. This seems to be a very satisfactory culmination to the activities of the small band of RTTY enthusiasts who have fought for RTTY in Britain. While we are on the subject of the British RTTY'ers I should remind all of you to be sure and take part in the DX contest sponsored by the BARTG starting at 0200 GMT on March 20th. Details are on page 2 of our February issue, so dig 'em out and get a fresh roll of paper in the printer for that week-end. Coming at this particular time of the year it should be a real barn burner, so don't miss it!

Dave, W9DPY, mailed in some fine copy from a good solid contact with Olaf, SM6CKV, in Gothenburg. Judging from the quality of the copy Dave made, SM6CKV must be getting into the States like a local. Erosa, XE1BI, writes that he just returned from a trip to the States where he covered quite a bit of territory. During his visit Erosa visited with Ed, K3GIF and Frank, W3PYW in the Washington, D.C. area. The purpose of Erosa's trip was to install radioteletype receivers in a number of Consulates and the Mexican Embassy for a new information service from the Department of Foreign Relations. He expects to be in Los Angeles and San Francisco in the near future.

Bill, VE4BJ, writes that there is some activity starting up on RTTY among the weather stations in the Arctic area of Northern Canada. No details as to calls but they should be worth watching for in the coming weeks. Bill points out that they have all been equipped with a converter and a Model 15.

Ed Clammer, K3GIF, sent in a most interesting letter which was sent to Alan, G2HIO, by a ham in Budapest. I think a few excerpts from it might be of interest to those of you who are still trying to get a contact in that part of the world. Here are a few of the better parts of the letter: "I have been very pleased to receive your letter and QSL card. I would not have thought that somebody would be so much interested to reply to a reception report. You have mentioned in your letter that as far as you know there are no RTTY amateurs in Hungary. It is quite true. Even amongst the SWL's only I listen to RTTY. I have bought a scrap Siemens set of which only the receiver part works, even this is not perfect. My receiver is a "14 valves super" and I use a simple signal catcher. Perhaps the equipment sounds primitive but I have received nice QSO's from the following stations: K1CPX, W3KDF, K4TEU, W4MGT, FG7XT, LU1AA, DL3IR, I1LCF, F8RY/FC, OZ5EI, ON4NW, G3HKR, 5A5TR. There is an interest for the RTTY here, too. The reason why there is no RTTY stations here is due to financial difficulties. Dear Alan, I would like to ask you—if it is not too much—to write to me the RTTY frequencies and the most likely time at which these RTTY amateurs are working. I would be very pleased to exchange letters with you, Alan. I would write to you about received stations and you could give me information about the techniques of RTTY. I am waiting your letter, but please do not send your letters to the Club's address, because they would be opened. Kindest regards to you and your family. 73" (name withheld for obvious reasons). Read that over and be thankful for that old model 15 you have been cussing all week. I guess one never realizes how well off he is until something like this comes along.

Well, Gang, I have run way over my allotted space so will have to cut it short. See you all here next month and don't forget to mail me your DX news and rumors. I need your help!!

73
Bud, W6CG

FOR SALE: Model 15, 60 wpm, sync. motor, $90.00. Model 14 TD, NEW, 60 wpm, sync., $80.00. Northern Radio type 107; model 2 FS converter, $175.00. WANTED, cover for 28-ASR and 28TD-LXD. Also AFSK TEST TAPE on magnetic tape, 15 minutes of comprehensive test using 2125 and 2975 cps recorded at 3.75 ips. K5BQA, 11040 Creekmere, Dallas, Texas. 75218.

FOR SALE: RTTY-Dual Frequency shift tone converter, 110-220 V 50-60 cy, 1 ph. Northern Radio type 152. Eavh tone converter is self contained including power supply. O/A dim. 17"x3 1/2" x19" complete with tubes and cables, used, excellent, $45.00 each. Modification in RTTY January, 1965. RTTY - Dual - Frequency shift tone keyer, 110-220V, 50-60 cy., 1 ph. Northern Radio type 153, each tone keyer is self contained including power supply, O/A dim. 17"x3 1/2" x19", complete with tubes, cables and instruction book, new, $50.00 each. ATLANTIC SURPLUS SALES, 250 Columbia Street, Brooklyn, N.Y. 11231.

FOR SALE: TU No. 5 shown in October, 1964, RTTY, Cashion Electronic Co., 11,-101 West Buckeye Road, Cashion, Arizona. 85329.

NEWS: 14th Annual HAMVENTION, April 10, 1965, at Wampler's Arena, Dayton, Ohio. Technical: RTTY, Antennas, DX, SSB, VHF, ARMY MARS, FCC Exam. For information write: DAYTON HAMVENTION, Dept. Dept. RT, Box 44, Dayton, Ohio. 45401.

FOR SALE: Model 15, 14 and other Teletype, Parts, etc. W6VPC, 1067 Mandana Blvd., Oakland 10, California.

FOR SALE: Teletype printers, Chicago area. Leslie Johnson, WA9HDG, Orchard Hill Farm, Tinley Park, Illinois.

FOR SALE: Teletype gears and parts. W9YVP, 11001 South Pulaski, Chicago, Ill.

WANTED: Your call as well as name and ZIP code when writing to RTTY, Inc.

WANTED: More NFSK operations on the RTTY Frequencies, 170 cps or 350 cps.

FOR SALE: Model 15, excellent condition, $50. W6HGX, 26096 Jane Avenue, Hayward, California.

FOR SALE: Signal Corps Technical Manuals, send for list. Quaker Electronics, P.O. Box 215, Hunlock Creek, Penn.

FOR SALE: Drake 2B/speaker, one of last few made, original cartons, $220.00, no trade. 14-TR kybd., EOL reel, cover, $80.00. Will ship 2b, f.o.b., prefer pickup on 14. W8CSH, R.D. No. 5, Athens, Ohio. 45701.

WANTED: Adjustment and parts manual for Model 28 KSR&RO and the 28 reperf. Gear and pinion set for Model LARP Wultimagnet reperf. Model 14 TD disc brushes. Gerald Murphy, 2547 18th Avenue, San Francisco, Calif. 94116.

WANTED: Cover for model 15, also TT/63. WA6CWZ, 1330 North Normandie Avenue, Hollywood, Calif. 90027.

FOR SALE: Model nineteen metal table, comm. type, automatic carriage return and line feed, with line feed suppression, 60 speed, sync. motor on printer and TD, tape out pin and includes small magnet supply, $150.00 complete, without TD $110.00. W6PHS, P.O. Box 295, San Carlos, Calif.

FOR SALE: Paper, Teletype, standard canary, 8 1/2" roll, new, not watermarked or damaged in any way. For ham or commercial use (2500 rolls), $9.00 case or 90c roll. Also 8 decade pen recorder paper, REC29, same as RA87 Teletype power supply, 110V DC at 400 ma. Good cond., $8.00. Transmitting tubes, new only, no pulls, best prices. Write for list. IE; 6146—$2.60. Heathkit Tunnel Dipper, professional wiring job, $20.00. W2DLT, 348 Essex Street, Stirling, N.J. 07980.

FOR SALE: RTTY converter, Radio Frequency Lab Model 1946, new. Front control shift 400-600-800 cps with built-in power and flashing signal lights. No scope needed. Regular net $365.00, will sell for $149.00. New Condx. Model 1601C-TR Narrow shift, 85 to 350 cps, with audio oscillator, regular net $435.00, slightly used, $149.00. WONHP, 7205 Center Drive, Des Moines, Iowa.

FOR SALE: Model 26, with table, cover, 60 wpm gears, comm. type, Auto CR&-LF, sync. motor, good cond., $50.00; 14TD and typing reperf. on 14 steel table with power supply, covers, EOL, sync. motor, comm. type and keytops, tape holder, tape lifter, backspacer, 60 wpm gears, guaranteed cond., $200.00; 255A polar relays, no covers, $1.50. Also misc. parts. All prices f.o.b. South Bend, Indiana. K9MVX, 134 N. Varsity Drive, South Bend, Indiana.

NOTE: When writing to RTTY, please give your call and zip number. Subscription renewals should be made to expire with the December 1965 issue. Price per single issue is 30 cents.

NOTICE—RENEWALS AND SUBSCRIPTIONS ACCEPTED THROUGH DECEMBER 1965 ONLY

Subscription Rate $3.00 Per Year
Via Air Mail or Overseas $4.00 Per Year

RTTY is the Official Publication of the

RTTY Society of Southern California
W6EV

and is published for the benefit of all RTTY Amateur and Experimenters

Copyrights reserved

For "RTTY" Information:
W6AEE, Editor W6CG, DX Editor